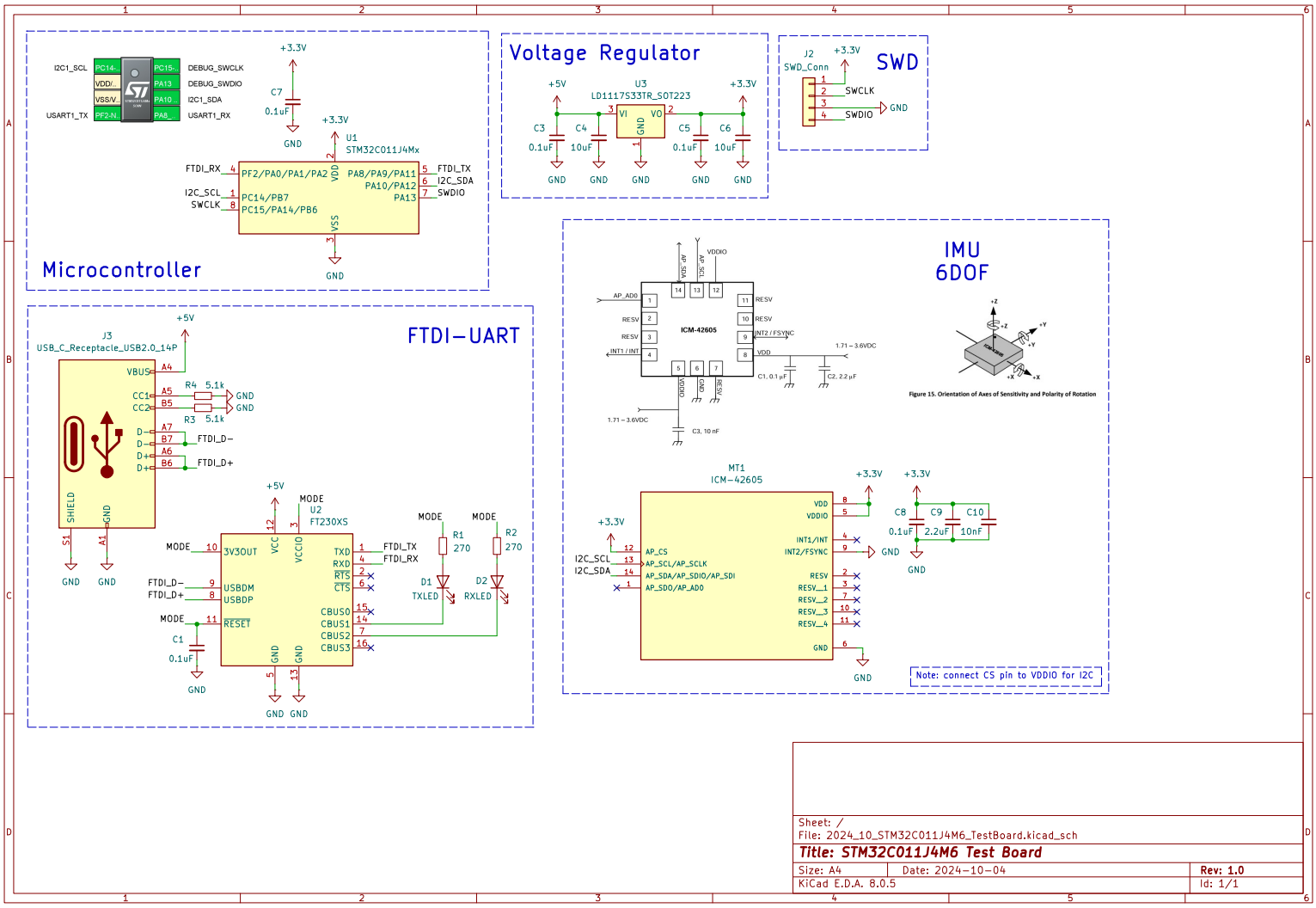

Sheet: /
File: 2024_10_STM32C011J4M6_TestBoard.kicad_sch

Title: STM32C011J4M6 Test Board

Size: A4	Date: 2024-10-04	Rev: 1.0
KiCad E.D.A. 8.0.5		Id: 1/1